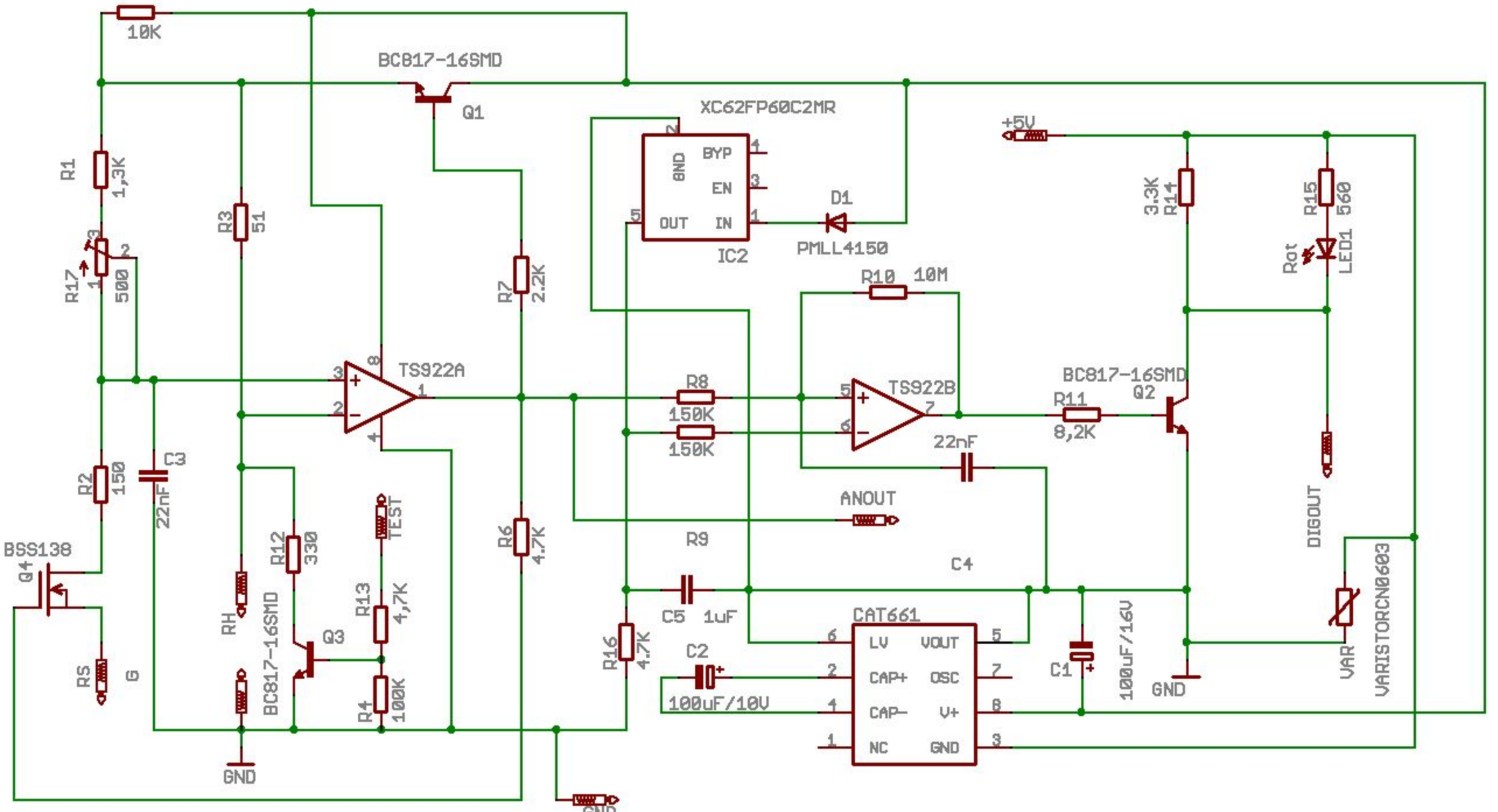
10K
BC817-16SMD
Q1
XC62FP60C2MR
BYP
GND
EN
OUT
IN
IC2
D1
PMLL4150
+5V
R1
1,3K
R17
500
R3
51
R7
2.2K
TS922A
R8
150K
150K
R10
10M
TS922B
R11
8,2K
BC817-16SMD
Q2
3.3K
R14
R15
560
Rot
LED1
22nF
ANOUT
R9
C4
DIGOUT
R2
150
C3
22nF
BSS138
Q4
RS
G
RH
R12
330
TEST
R13
4,7K
R4
100K
Q3
BC817-16SMD
R6
4.7K
R16
4.7K
C5
1uF
C2
100uF/10V
CAT661
LV
VOUT
CAP+
OSC
CAP-
V+
NC
GND
C1
100uF/16V
GND
VAR
VARISTORCN0603
GND
GND